Article: SP-N-89-160-18

2020-04-05

Production code:
S16LDRB0020-EZIZIZK4LD-A1C2A1A1-0000-B000

SSP North AB
Tullkammarvägen 14
439 00 Onsala, Sweden
sspn.se

Safety System Products

C2 M12-5 F 100 mm, (SP-N-88-003-05)

Q2

A1 M16 (SP-N-88-001-73)

Q4

EZ (SP-N-88-300-01)

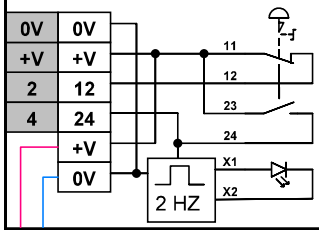

Q5

IZ (SP-N-88-300-02)

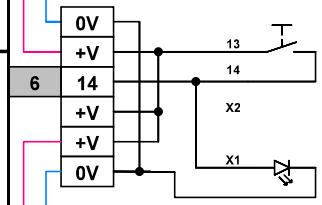

Q6

IZ (SP-N-88-300-02)

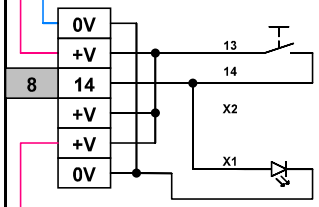

Q7

K4 Key (SP-X-88-000-48)

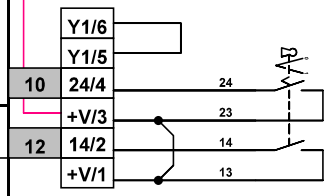

Q8

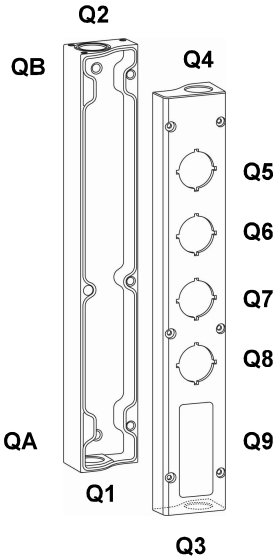

Q1 - Q4 (M16)
Q5 - Q9 (22,5 mm option)
QA & QB (16 mm option)

Safety Simplifier S16RBLD20

+V x 5: 12/24 VDC (10 - 30 VDC)
0V x 5

I/O: 1-14

Connected terminals

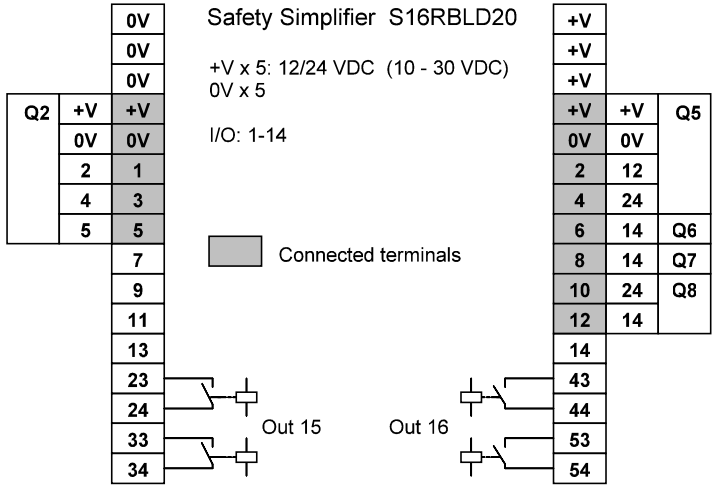

B1 M16 Q1-Q4 (SP-N-88-001-27)

2 x

IZ Lens/Lins

2 x

A1 M16 (SP-N-88-001-73)

Q1

A1 M16 (SP-N-88-001-73)

Q3