PRODUCT LINE

innovative machine safety

SSP
Safety System Products

Contents

1	**Safety fence**		**3**
2	**Wireless safety**		**8**
	Safety Simplifier	Decentralized safety controller	10
3	**Safety switch & key transfer systems**		**18**
	SAFIX	RFID safety sensor	20
	HOLDX	Smart process lock	22
	XCONN	Passive junction	26
4	**Safety relays**		**27**
5	**ZEUS enabling switch**		**28**
6	**Operating elements**		**30**
	EDI	Emergency stop button	30
	Operating elements	Versatile button units	31

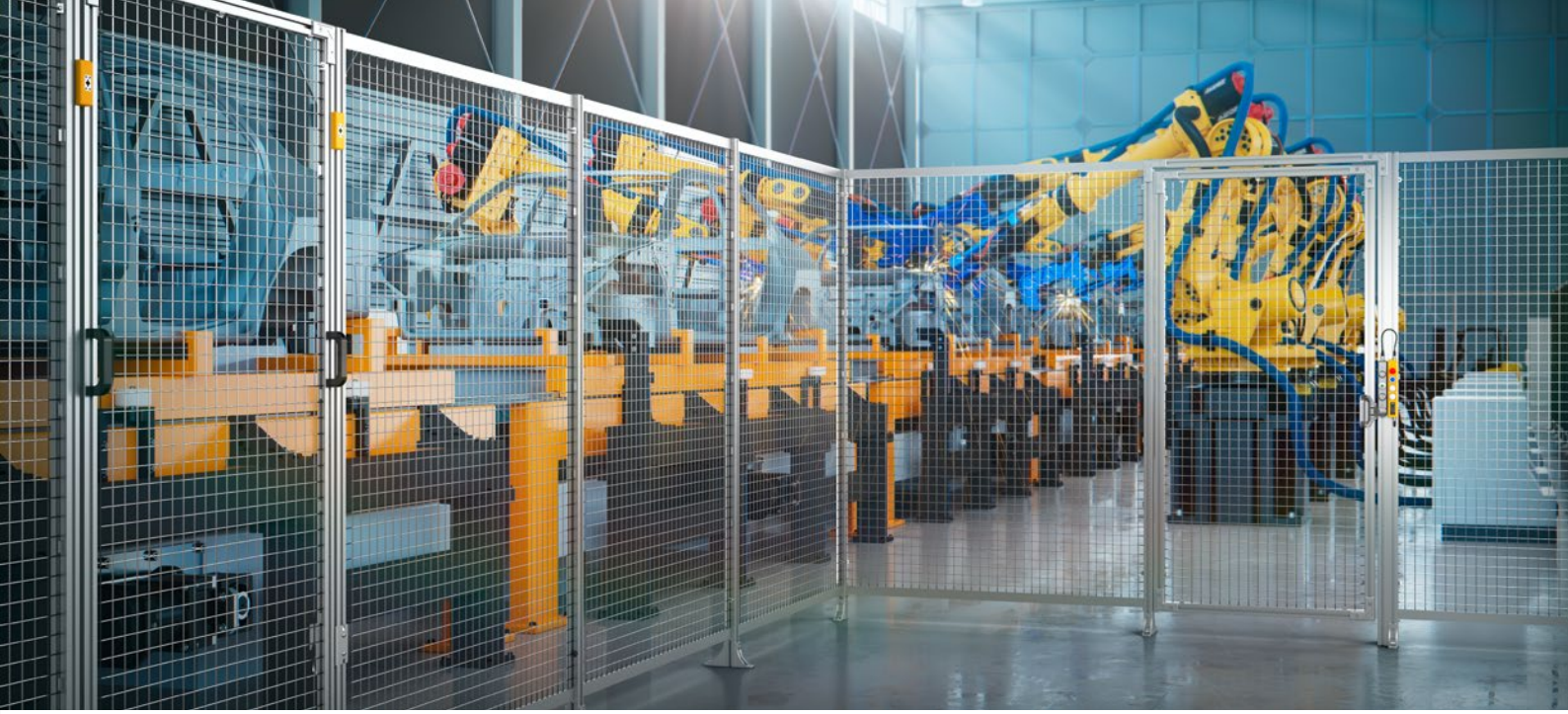

Safety fence

FLEXIBLE ALUMINUM SYSTEM

A modular aluminum fence system that can be individually adapted to customer wishes and needs and that is open to future expansion.

- **Flexible** - Fence guide, shapes and cutouts
- **Adjustable** - Easy assembly and sliding components
- **Uncomplicated** - No drilling thanks to the Fast Connect System
- **Cost-effective** - Functional systems and standard fields
- **Expandable** - Large selection of attachment parts

The SSP Safety Fence System

Aluminum profile

Anodized 44 x 44 mm profiles with an 11 mm groove form the basis of the SSP safety fence system. Other matching profile sizes can be easily combined with each other. Due to the special design, the profiles are light but still stable.

Slot nuts

The basis of the SSP Fast Connect technology are the slot nuts. They position themselves in the groove when screwed in and allow fast assembly.

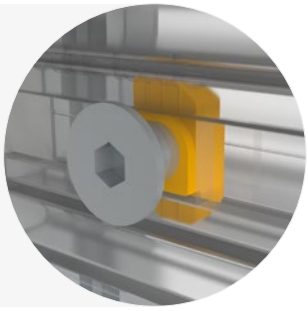

Fitting technology

The combination of fittings and slot nuts enables uncomplicated connection of the individual aluminum profiles. Drilling and thread cutting is not necessary. L, T and I fittings ensure stable and flexible mounting of aluminum profiles.

Fillings

Wide range of fillings made of different materials for safety and functionality. From spot welding grid to transparent polycarbonate and opaque sheet metal to special fillings such as fine real glass.

Grid fixation

The SSP grid fixation ensures a solid connection between the profile and the filler. It increases the total stability of the safety fence.

Clamping strips

Polycarbonate, sheet metal or real glass fillings are additionally fixed with clamping strips. This stabilizes the connection and reduces vibrations.

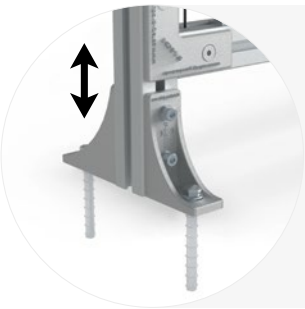

Floor attachment

The combination of floor attachment bracket and aluminum profile compensates for any unevenness. The floor angles can be mounted at different heights. Expansion anchors provide a firm hold in the floor.

Safety Fence

Warehouse Logistics

Uncomplicated and cost-effective solutions for large-scale storage and logistics facilities.

Harsh environments

Even under harsh environmental conditions, the SSP safety fence can be used individually.

Product Presentation

Scan the QR code and watch our video on YouTube!

Robot protection

Stable spot welding grid with reinforcing fixation technology and robust aluminum profiles. SSP safety fences are regularly tested using pendulum and ballistic tests.

Transparency

Thanks to polycarbonate fillings, the machines stay perfectly visible and provide not only grip guard and protection, but also good-looking machine safety.

Application Areas

Conveyor technology

Requirements for construction heights and openings can be flexibly implemented.

Automotive

The SSP safety fence system reliably meets the requirements of automated production in the automotive industry.

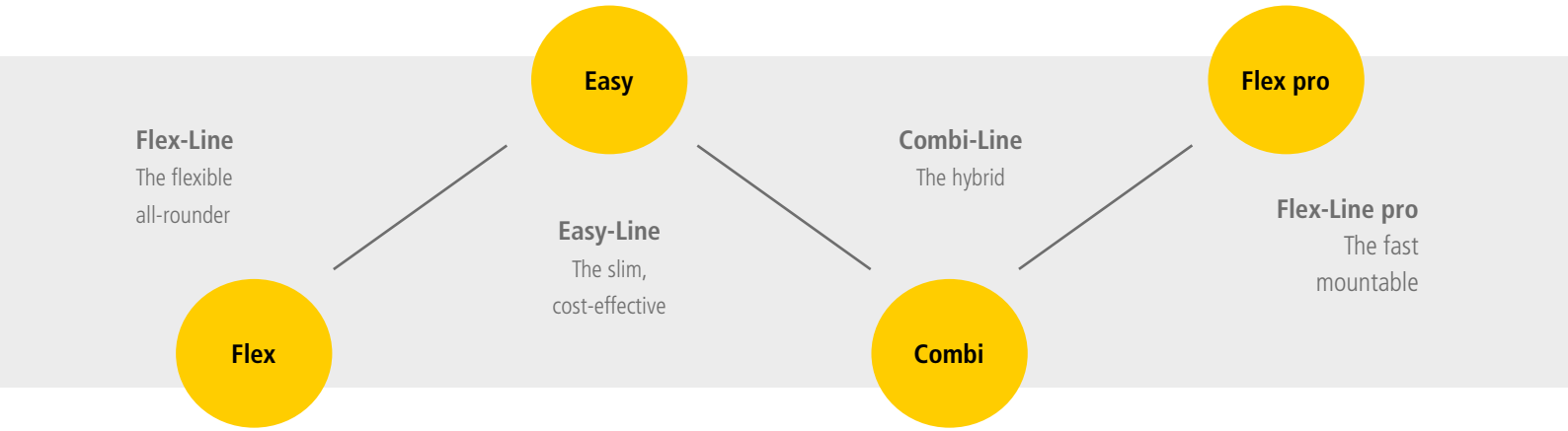

Machine enclosure

The SSP safety fence system is suitable for simple fence sections, for complex machine enclosures and for the enclosures of robotic installations, machines and manual workstations.

Individual

The route of the fence follows the route of the machine and the application. Angles, slopes, fillings and much more can be customized with the Flex-Line model.

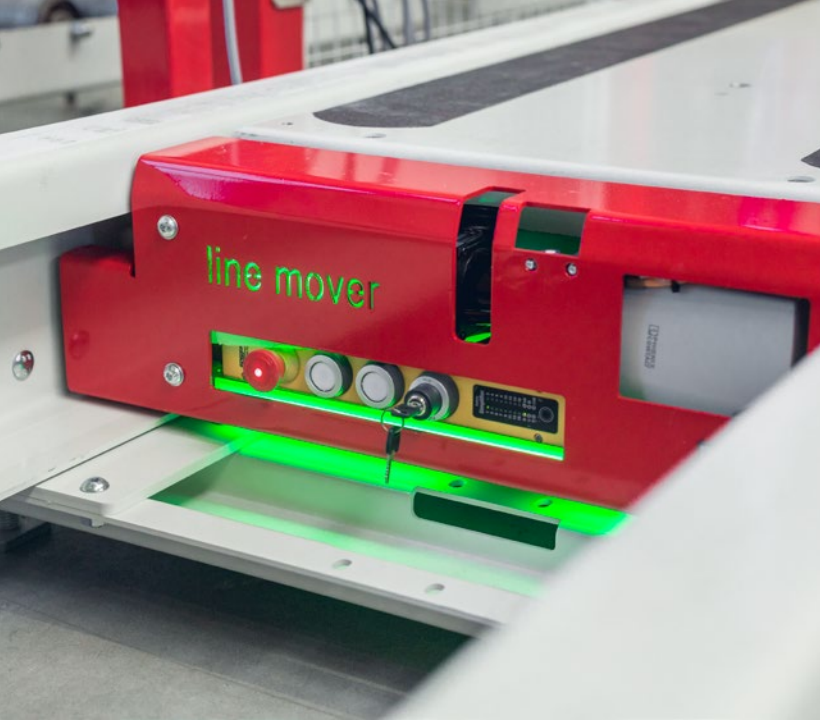
line mover

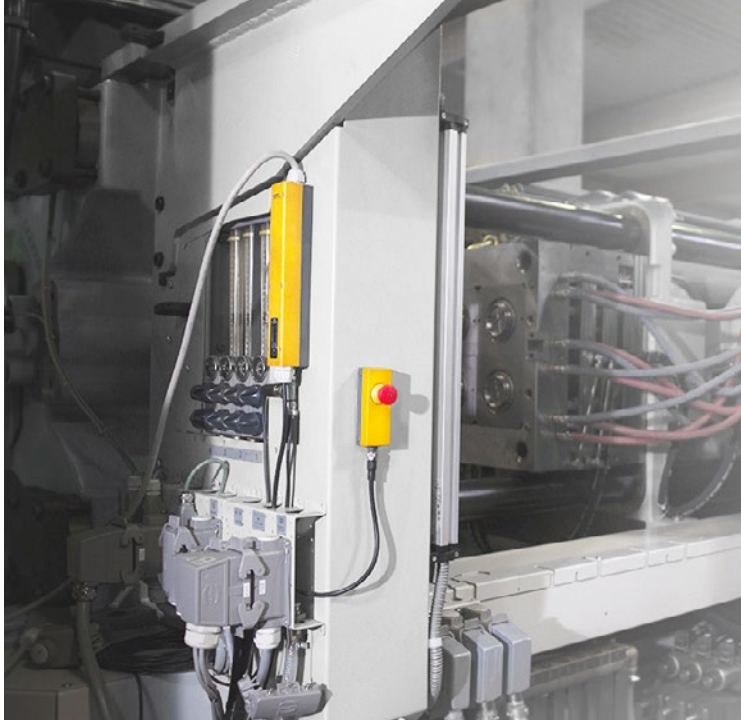

SSP
Safety
Simplifier

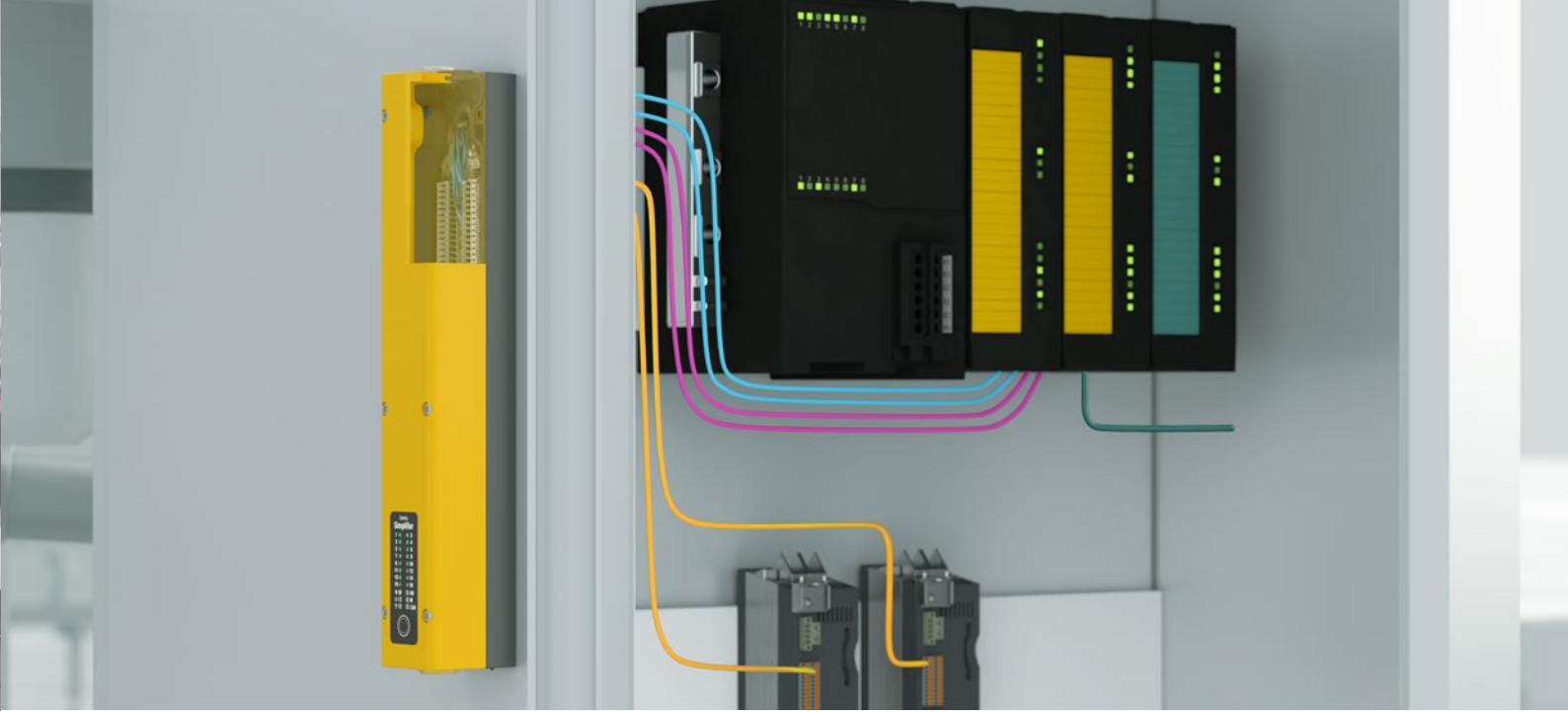

Wireless Safety

DECENTRALIZED SAFETY CONTROLLER

The Safety Simplifier is a safety controller with integrated wireless interface. In addition to a wireless interacting safety controller, the complete safety solution includes pushbuttons, emergency stop buttons and connection options for safety sensors or similar.

- **Decentralized design**
- **Simplification of diagnosis**
- **Combined functions in one housing**
- **Flexible and expandable inputs and outputs**
- **Reduced wiring effort**
- **Plug & Play standard units**

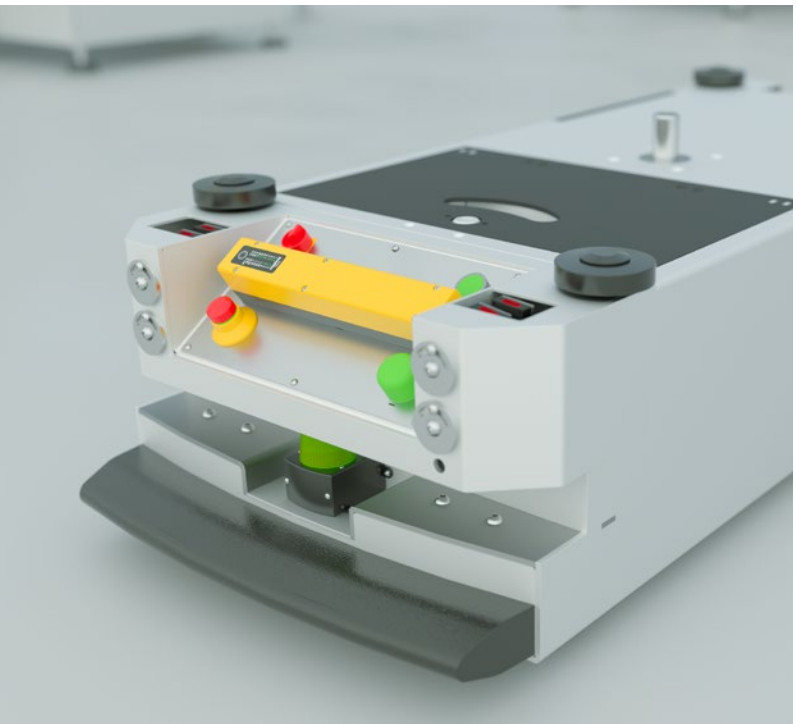

Safety Simplifier

Central & Decentralized Safety Controller

The Safety Simplifier is a highly flexible safety controller that can be used either centrally or decentrally.

Thanks to wireless communication, the wiring effort is radically reduced. Up to 16 Safety Simplifiers can be linked via the secure wireless network.

This reduction in cabling saves resources and time in planning, documentation, setup and commissioning. There is no need for a control cabinet for the safety technology.

The flexibly configurable inputs and outputs of each Safety Simplifier facilitate the creation of safety systems.

Due to the multi-master principle, each communicating Simplifier is also a repeater. This principle creates a secure mesh network in which each Safety Simplifier shares its global information with all participants within its range.

Spring-loaded terminals secure the connections also in case of strong vibrations

4 relays for 2 × double-safety outputs (optional)

Memory card with application software for easy exchange

USB interface for programming and diagnosis

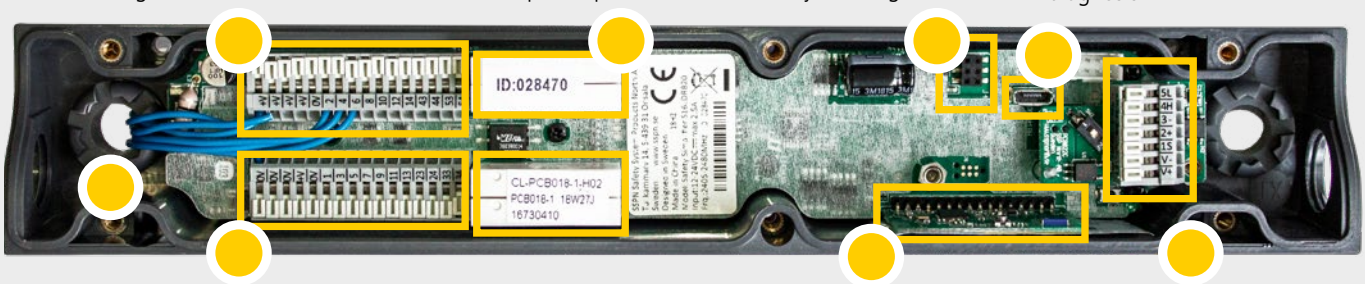

Feed-through to the control cabinet

14 I/O's as safety inputs or redundant OSSD outputs

Safe wireless interface (optional)

Safe CAN interface (optional)

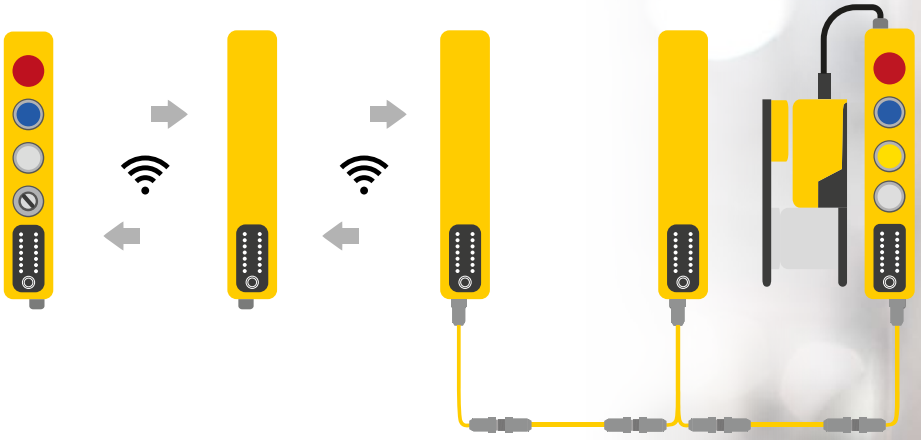

- The flexible and safe solution for decentralized applications
- high safety up to SIL3 - PLe - Category 4
- 16 safe inputs and outputs can be configured flexibly and individually
- Predefined functional modules for easy and fast programming

Reduced wiring effort thanks to wireless communication

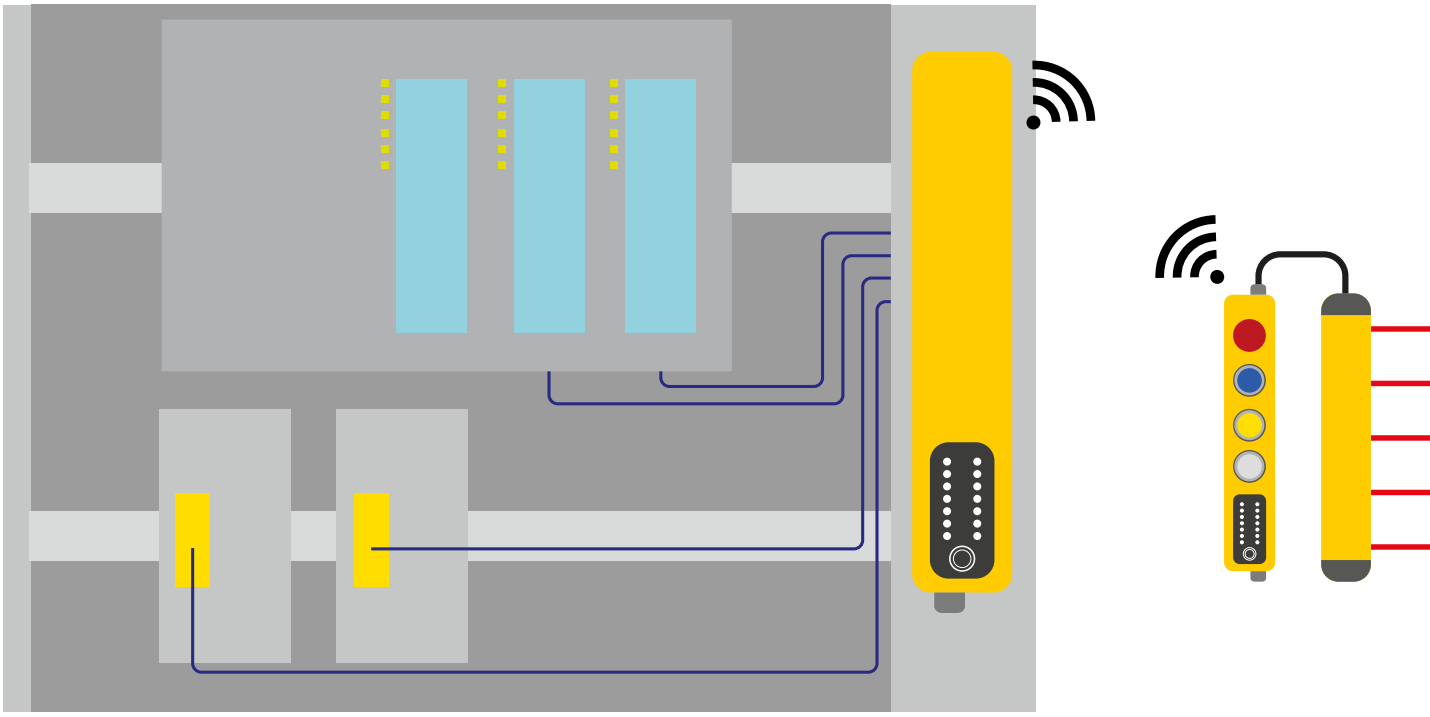

Not every decentralized structure of a safety system redu

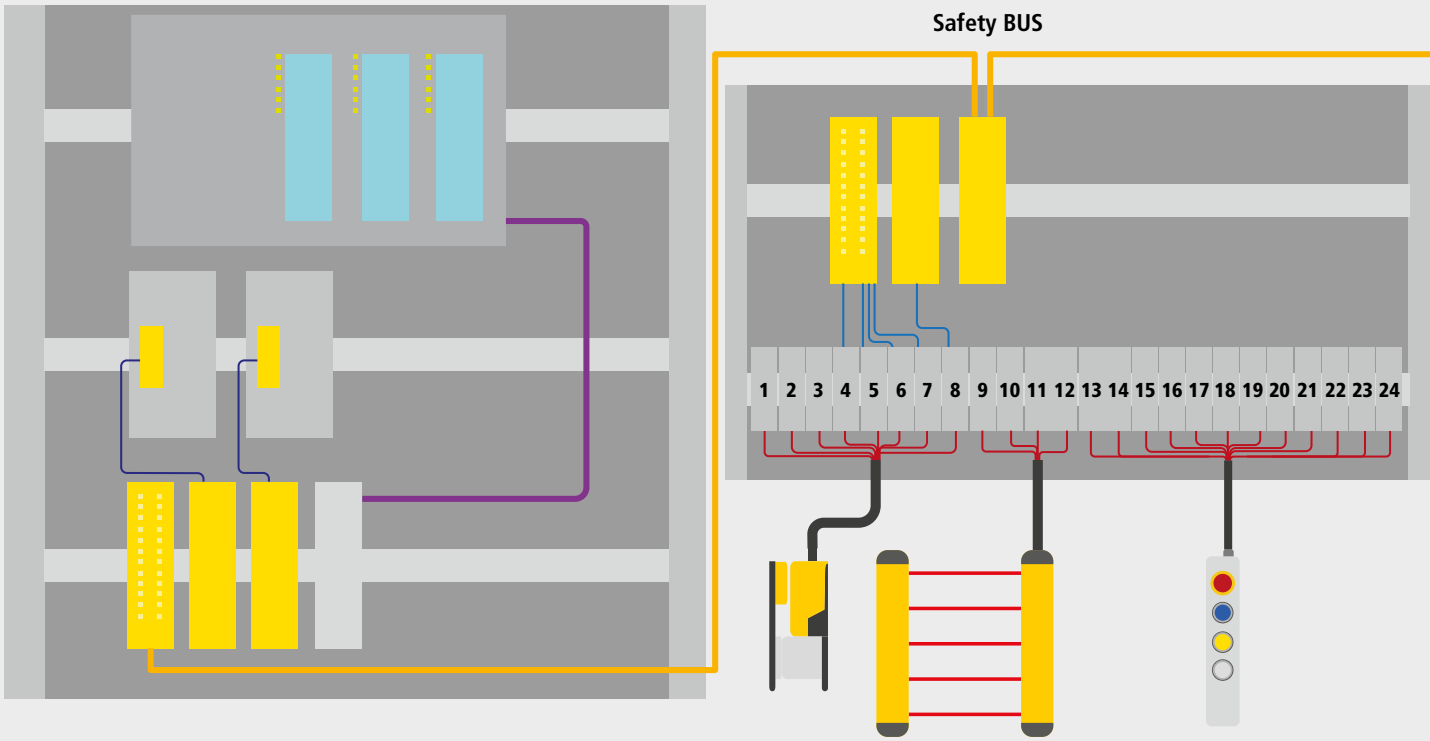

in a decentralized safety system

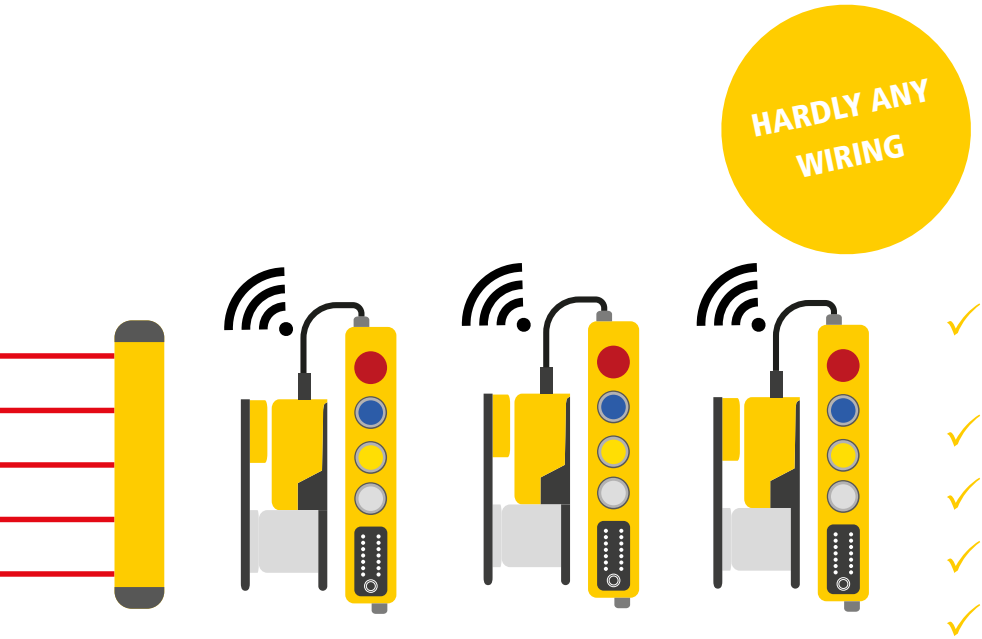

- ✓ Significant reduction of the wiring effort
- ✓ Fast commissioning
- ✓ Error reduction
- ✓ Flexibly expandable
- ✓ No terminals
- ✓ No terminal boxes

ces the wiring effort

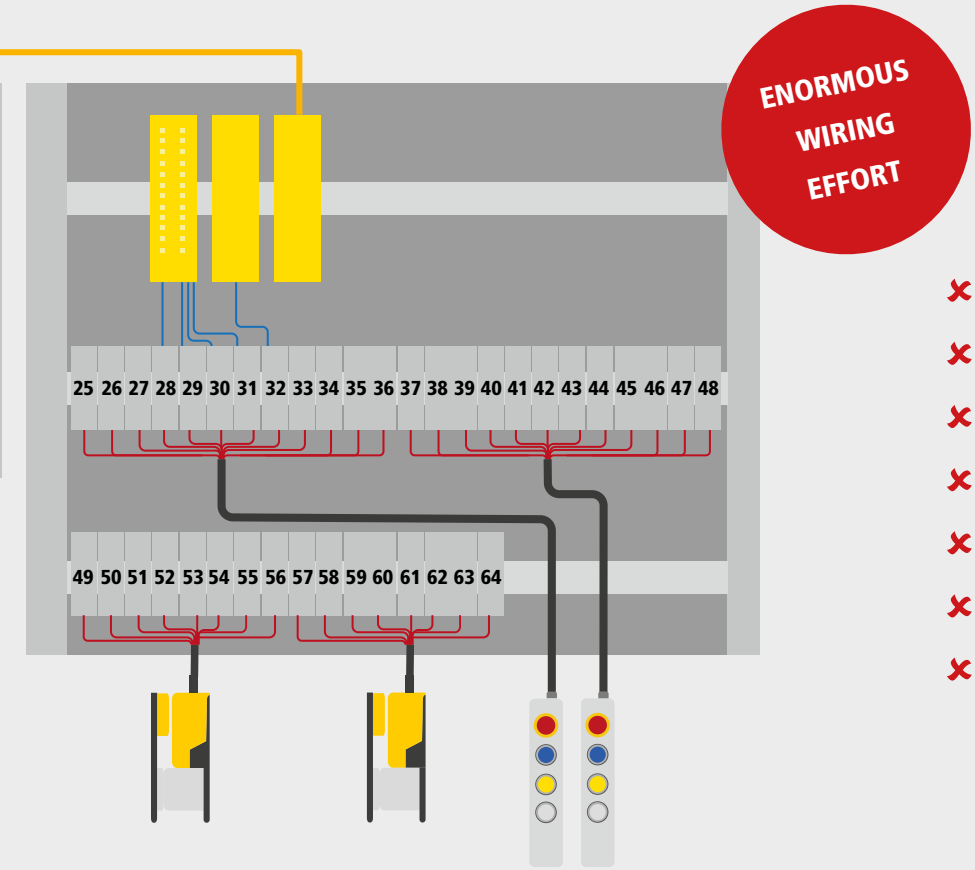

- ✗ High wiring effort
- ✗ Many modules
- ✗ Increased error rate
- ✗ Inflexible
- ✗ Extra control cabinets
- ✗ High cost expenditure
- ✗ Small applications already require up to 64 terminals

Application

Safety control and operational unit in one system with Safety Simplifier

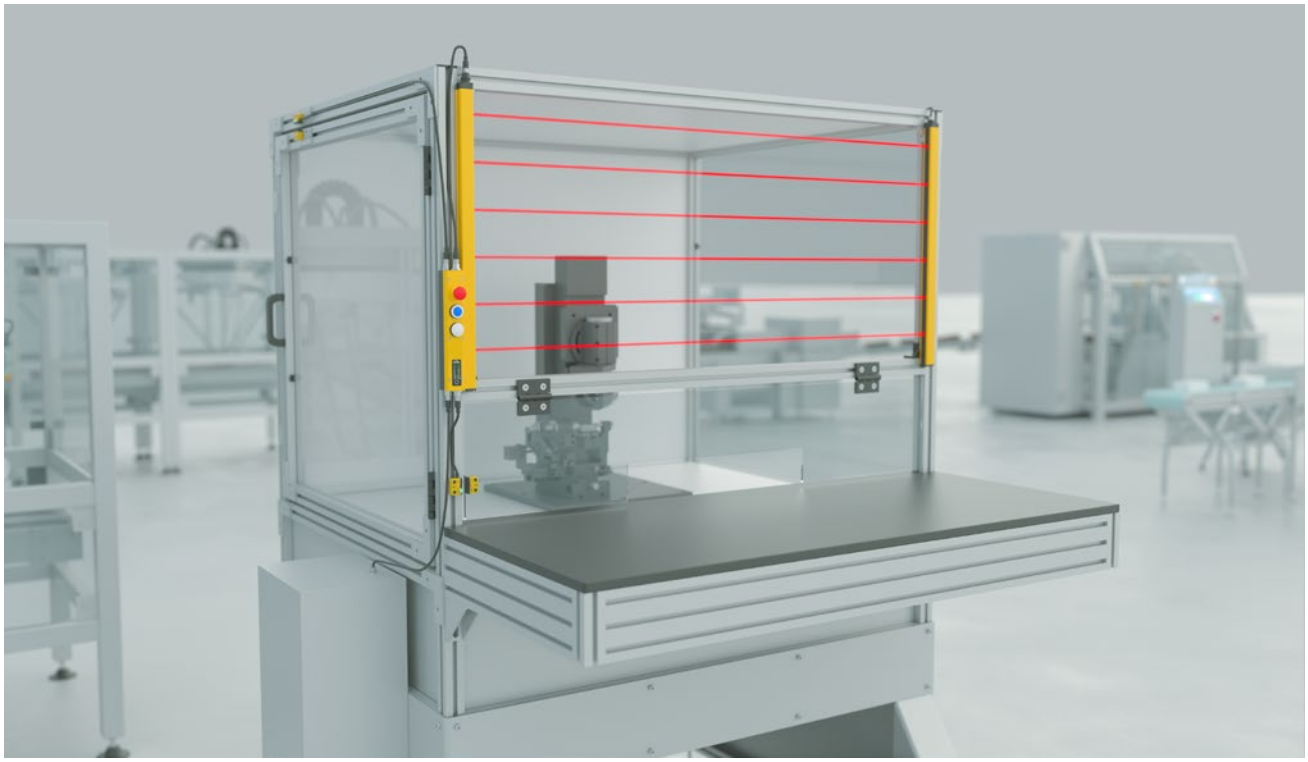

Safety controller directly integrated in the operational unit, without additional safety controller in the control cabinet

Application description

A safety light curtain with finger protection is used for the safety of the manual workstation for cyclical intervention. Two SAFIX W3 RFID sensors secure the service doors and flaps. An emergency stop button integrated in the Safety Simplifier serves the extended safety technology to switch off the system in an emergency.

Safe drives with a STO input to PLe are safely controlled by potential-free relay outputs of the Safety Simplifier in two channels. A safe, pneumatic service unit is controlled via the safe OSSD outputs of the Safety Simplifier. The free software gateway sends all status information to the higher-level, non-secure control unit. A safety controller or safety relays in the control cabinet are not required. The Safety Simplifier is equipped with M12 connectors and allows installation in the shortest possible time.

Standalone application

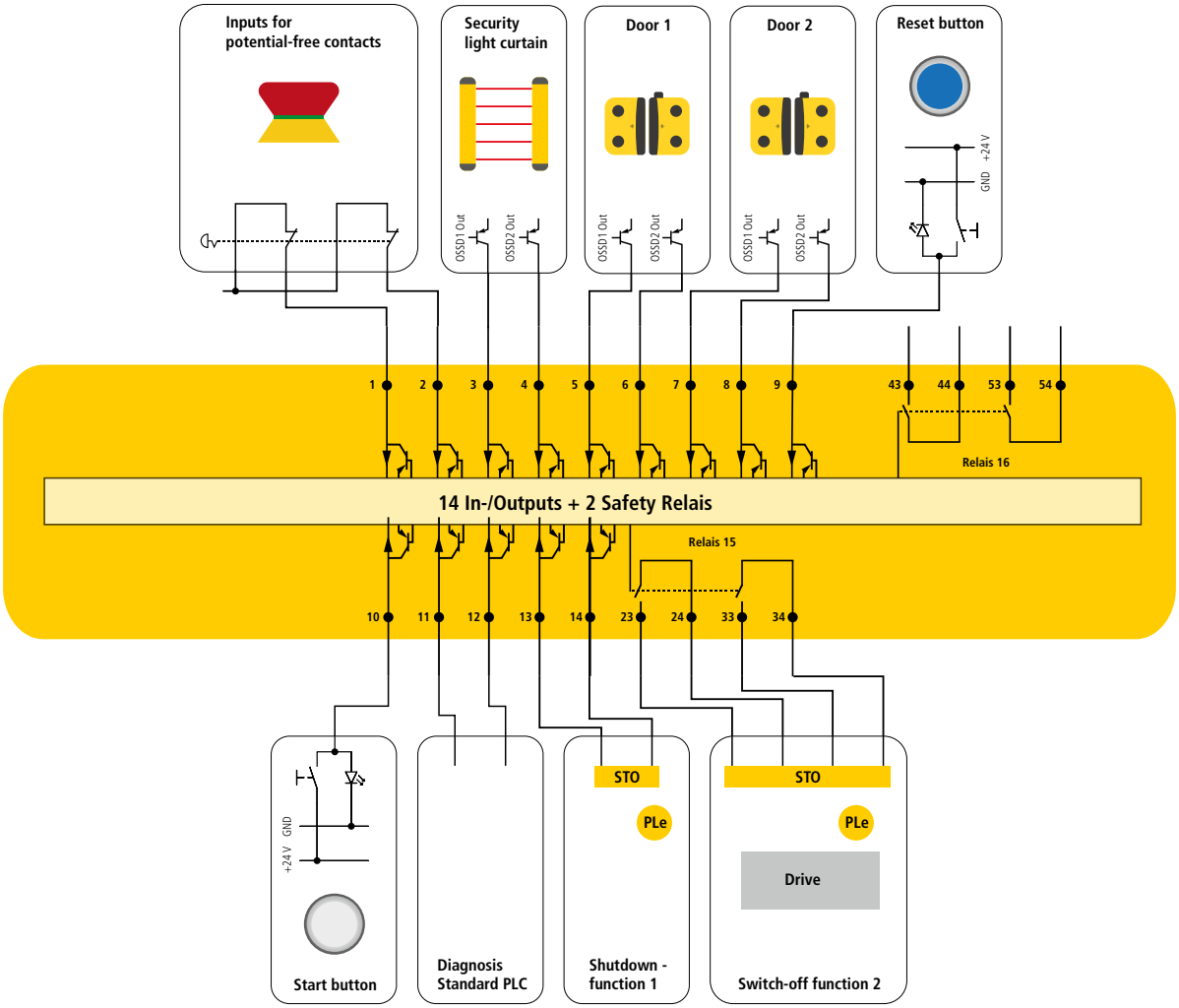

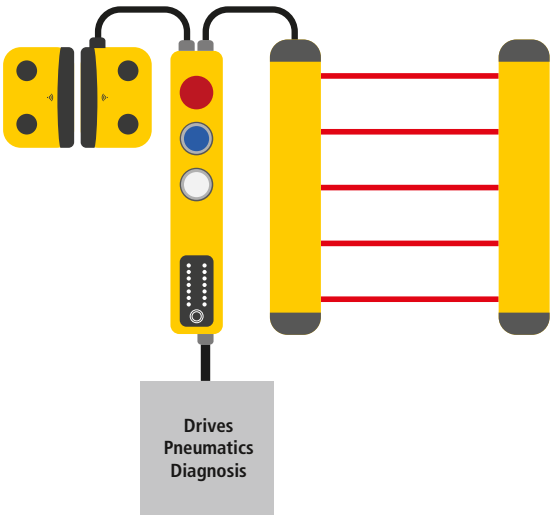

Advantages in the application

- ✓ No control cabinet for safety technology
- ✓ Reduction of commissioning time due to M12 connector
- ✓ Compact design in 40 mm for mounting on aluminum profiles
- ✓ No further safety controller/relay necessary
- ✓ Diagnosis via touch display on the Safety Simplifier

You can find our preconfigured standard models on the website

we simplify safety

Free Software

Clear program structures

Predefined logic and functional modules as well as drag & drop functions simplify the programming.

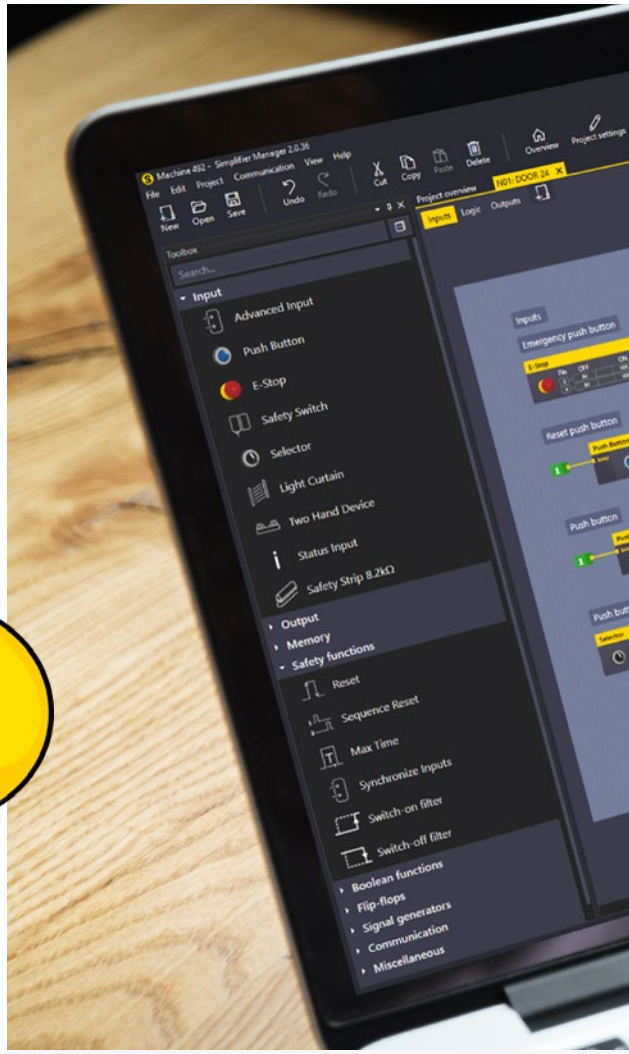

Free software gateways

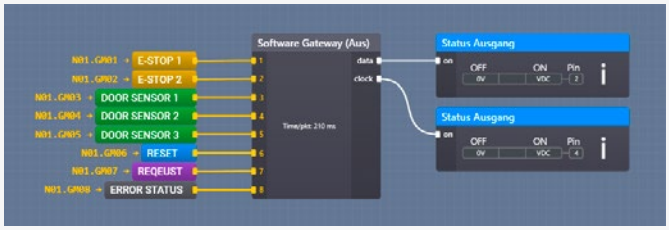

Functional modules for communication with the standard PLC via free software gateways.

WIRELESS

Wireless program transfer and diagnosis

Thanks to the wireless function, programming can be transferred to the Simplifier without cable restrictions and diagnosis can be performed in online mode.

Simplifier Manager

PROJECT REPORT

Import and export function of program parts

Standardization of programs with the import and export function. Simplifier standard units with prepared programs and E-Plan macros.

Optimized software validation

Individual checksums for each sub-page of the application software facilitate the validation process.

Online diagnosis

Online diagnosis via the wireless safety interface. Furthermore, the program can be simulated and tested offline.

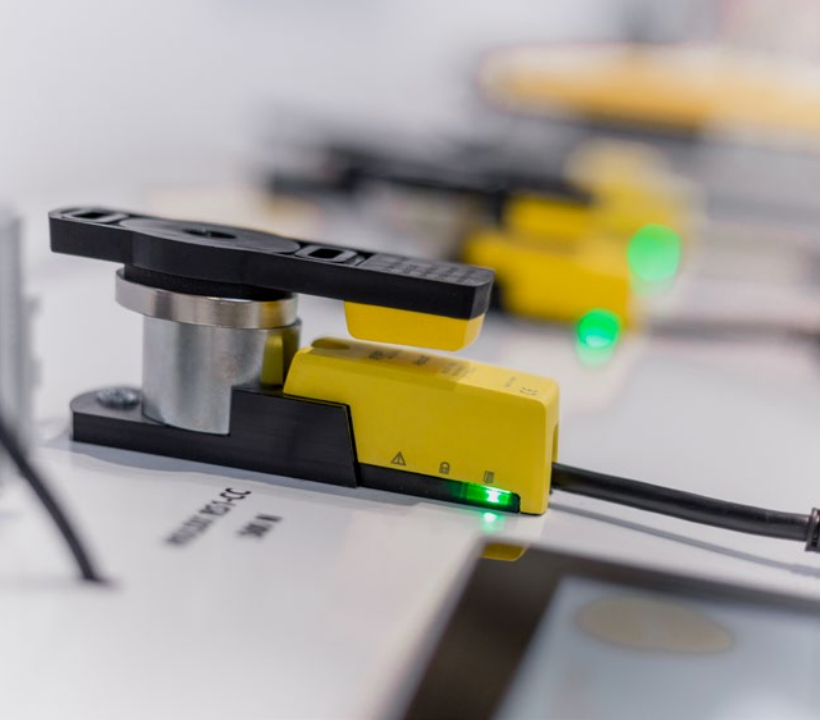

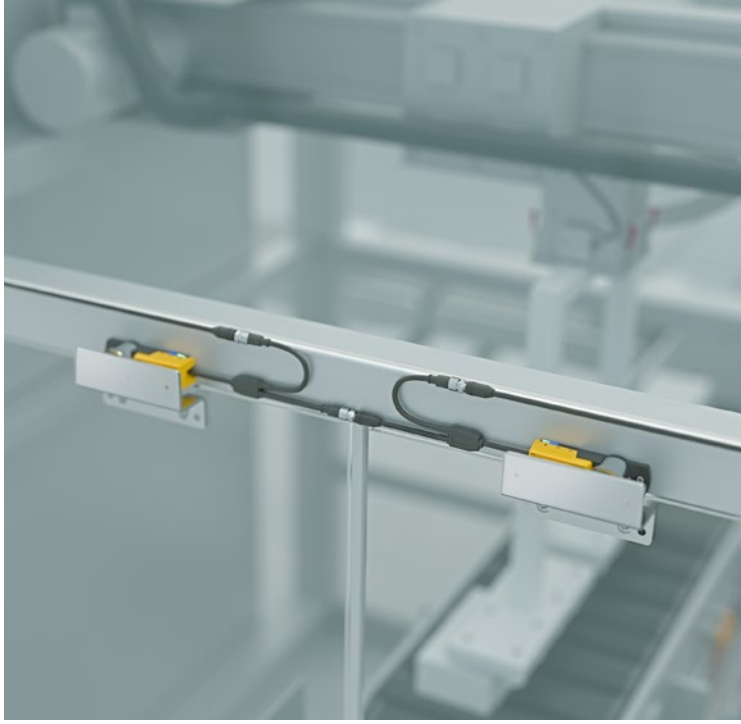

START
Safety
Simplifier

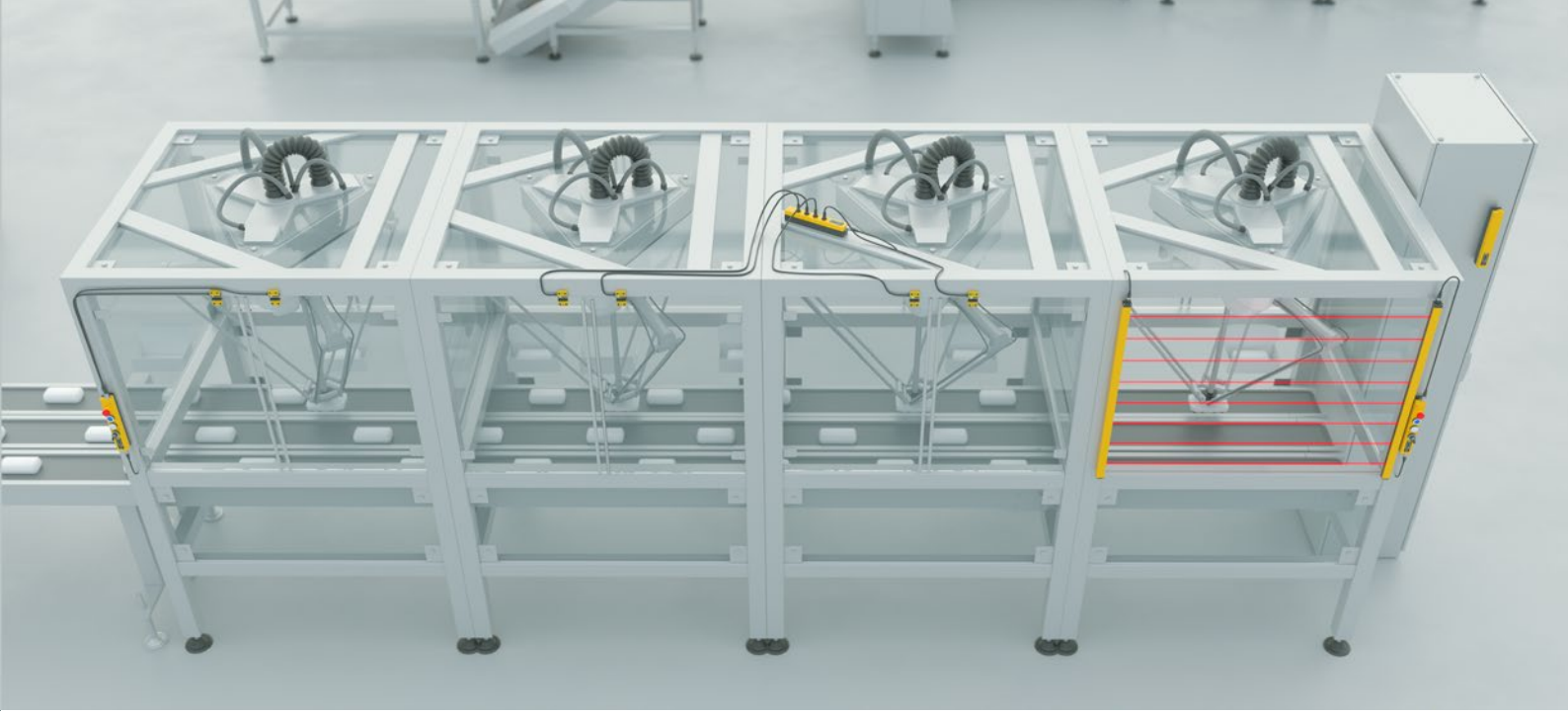

Safety switch

ATTACHMENTS
ACCESS PROTECTION

State-of-the-art technology in products for monitoring of safety doors on machines, plants and robots. They are suitable for a wide range of applications and protect people and machines.

- **RFID safety sensors**
- **Process locks**
- **Safety switch**
- **Key transfer system**

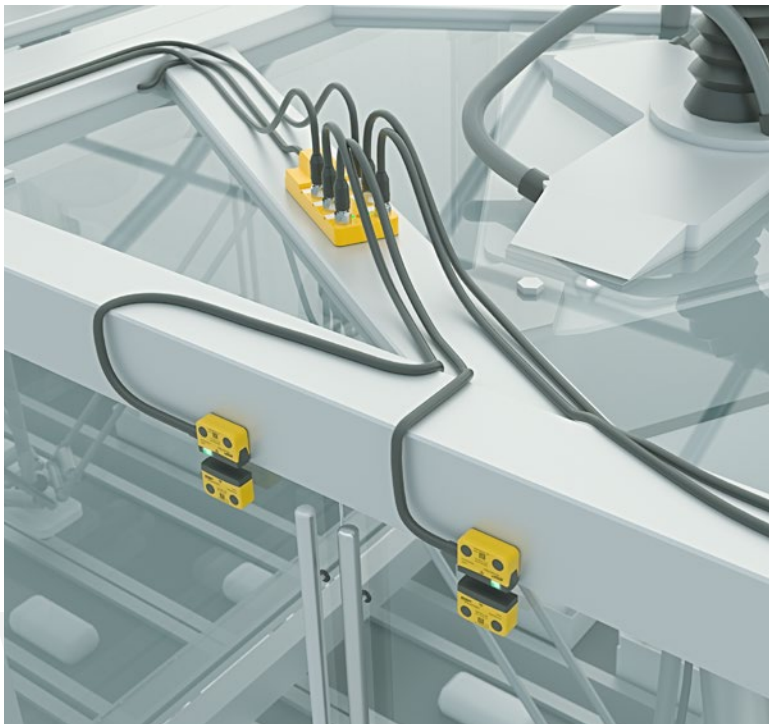

SAFIX

Non-contact RFID safety sensor

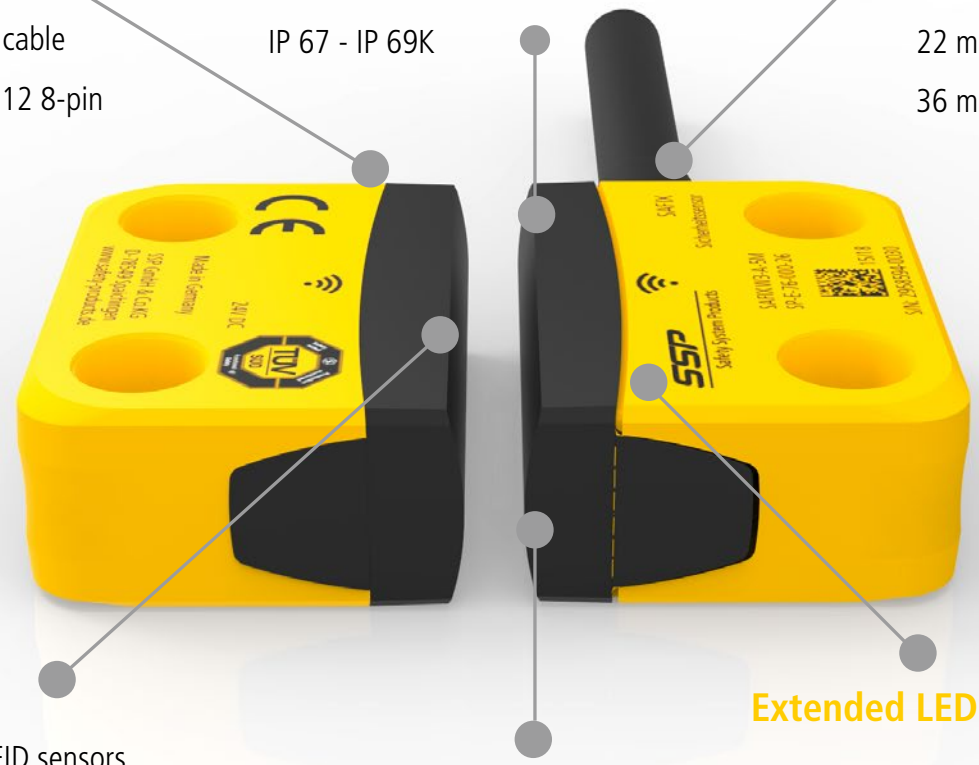

Connections

5 m cable / 10 m cable

or pigtail cable M12 8-pin

High protection class

IP 67 - IP 69K

Compact design

22 mm hole spacing

36 mm width

Technology

Most modern RFID sensors

Switching distance

12 mm, also sideways

Extended LED diagnosis

both sides

IP69K

Wide range of safety applications

- ✓ PLe acc. to EN ISO 13849-1
- ✓ High coded acc. to EN ISO 14119 (version SAFIX I and W)
- ✓ Series connection of up to 30 sensors without safety loss
- ✓ Reaction time of only 75 ms
- ✓ EDM input to monitor contactor and start buttons

Flexible in assembly and wiring

- ✓ High protection class IP67 and IP69K for use in rough environments, according to ECOLAB
- ✓ Flexible connection concept with passive junction box XCONN or wireless distributor Safety Simplifier
- ✓ Connections via 5 m and 10 m cable or M12 pigtail connection
- ✓ Extended LED diagnosis

EXCERPT FROM EN ISO 14119

5.2 Arrangement and installation of position switches

Position switches must be arranged in such a way that they are adequately protected against any change in their position. To achieve this, the following requirements must be met:

a) the fastening elements of the position switches must be reliable and a tool must be required to loosen them.

If it is stated in the risk assessment that the safety switch must be prevented from loosening (EN ISO 14119), the screw covers supplied are a possibility to omit the safety screws. For subsequent opening of the screws, the cover must be opened with a special tool.

With screw cover

Connected in series

Flat actuator SAFIX T6

HOLDX R

The smart process interlock

The new generation of magnetic process guard lockings - Award winners, innovative and intelligent.

The HOLDX R series cleverly combines a secure non-contact RFID safety sensor with an intelligent electromagnet in a single device. With this combination of safe position monitoring and process guard locking, the HOLDX R is universally applicable and ensures increasing quality as well as less downtime and set-up times.

Two designs for your application

HOLDX RS

In its small and compact design, the HOLDX RS enables a locking force of 600 N. In addition to the locking force of the electromagnet, the movably supported anchor plate has a 50 N permanent magnet which prevents a door from instant opening.

HOLDX RL

Ideal for large doors. Thanks to the locking force of 1200 N, the HOLDX RL prevents doors from tearing open. With a slim width of only 35 mm, the guard locking is ideal for space-saving installation on aluminum profile systems. Like the HOLDX RS, the guard locking has also has a permanent magnet of 50 N, which prevents a door from opening.

HOLDX R1 Standard

Intelligent - innovative - safe

Flexible

Movable anchor plate

Smart downtime monitoring

by magnetic flux measurement

LED diagnosis

extended status display

High coded

2 coding levels acc. to EN 14119

standard/individual coding

Magnetic force

500 N locking force version S

1200 N locking force version L

50 N permanent magnet

Compact design

mounting on aluminum profiles

from 35 mm construction width

Non-contact safety RFID switch

acc. to PLe EN ISO 13849-1

Connection

flexible pigtail cable

M12 8-pin or

M12 12-pin

Network HOLDX R2

UP TO 30 IN SERIES

Reduction of commissioning time

Thanks to the two existing pigtail connections, Y-distributors and terminal boxes are no longer necessary. The HOLDX R cables are simply looped through from process lock to process lock. Thanks to an intelligent and simple wiring concept, up to 30 HOLDX R2 can be easily connected in series without giving up the diagnosis options. With the free software gateways from SSP, all participants can be individually evaluated and controlled.

Advantages of intelligent series connection

- ✓ Series connection of up to 30 process locks up to PLe according to EN ISO 13849-1
- ✓ Up to 170 diagnostic information are available in the system with series connection
- ✓ Each process lock can be controlled individually
- ✓ Evaluation of diagnostics on the standard - PLC without gateway
- ✓ Functional modules for Siemens / Beckhoff / Rockwell/ B&R available on the homepage for evaluation of diagnostics
- ✓ Wireless transmission of safe and non-safe diagnostic information even with series connection via the wireless Safety Simplifier safety controller

75 ms RESPONSE TIME

Advantages in the application

- ✓ PLe acc. to EN ISO 13849-1:2016
- ✓ High coded acc. to EN ISO 14119:2013
- ✓ Wear-free process guard locking
- ✓ Response time only 75 ms
- ✓ High protection class , IP67 for use in harsh environments
- ✓ Extended diagnostic options thanks to Bluetooth interface and HOLDX M a n a g e r software
- ✓ One diagnostic output provides up to 17 messages
- ✓ Functional modules for evaluation of the diagnosis are available for Siemens, Beckhoff and Rockwell

Advantages of Bluetooth diagnosis

- ✓ Has a guard locking been manipulated (wrong actuator)?
- ✓ How often a new actuator has been trained?
- ✓ How often was a door torn open even though it was locked?
- ✓ Storage of valuable information such as:
  - Short circuit
  - Loose contact in the cable
  - Wrong actuator
  - Voltage fluctuation
  - B10D-value of downstream actuators

XCONN

Passive distributor for easy wiring

- ✓ Connection of up to six SAFIX safety sensor with RFID technology
- ✓ Connection of up to six HOLDX process guard locking devices
- ✓ Release of all process guard locking devices can be set individually
- ✓ Connection of up to six EDI emergency stop buttons

XCONN Y-M12 Y-distributor

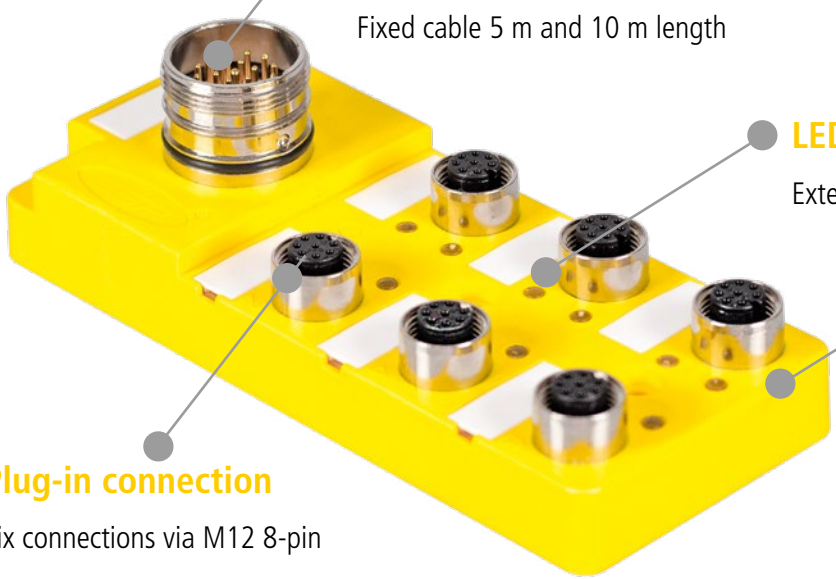

Connection

Male connector M23 19-pin

Fixed cable 5 m and 10 m length

LED diagnosis

Extended status display

Design

Robust and compact

Plug-in connection

Six connections via M12 8-pin

female connector

SSP safety relays

User-friendly and flexible

UNDER 10 ms RESPONSE TIME

Series S2

Series T2

Series X2

Pluggable connection technology with coding

Rotary switch for function setting

User-friendly

- ✓ Selectable up to 16 different applications
- ✓ Monitoring of all common safety sensors
- ✓ Achievable safety level up to PL e / SIL 3
- ✓ elected application can be secured with a seal
- ✓ Short response times (< 10 ms) on request
- ✓ High switching capacities and short cycle times

Flexible in application

- ✓ One of the two-channel monitoring of sensors
- ✓ Manual or automatic reset
- ✓ Monitoring of potential-free signals
- ✓ Stop Category 0 and 1
- ✓ Monitoring of OSSD signals
- ✓ Use as a contact extension or as a fully-fledged safety relay

ZEUS

Enabling and operational unit

Important legal regulations must be observed for work such as commissioning, maintenance, servicing or setting up processes in special operating mode.

The enabling mode has proven effective. In this operating mode, the machine operator has the option to bypass certain safety devices, such as safety doors, by selecting the operating mode and actuating the enabling unit. The important point here is the 3-level function.

Only in the middle position, the 3-step enabling switch allows certain hazardous movements. If the operator releases the enabling switch or pushes it into the Level 3, the system switches off for safety.

Reliable protection against manipulation

The operator terminal can be used to control up to 120 binary-coded functions, such as axes, valves or grippers. The 7-segment display shows the selected function and in this way facilitates the operation of the controlled function type. The extended LED diagnosis also provides extended status information.

The in-hand sensor offers a clear advantage in terms of protection against manipulation. Thanks to its ability to detect the user's hand, it reliably protects against bypassing. Therefore, manipulations by clamping the enabling switch are impossible. ZEUS detects via activity sensor when it is removed from the support bracket. Only then it is switched into the special operating mode. This makes sure that no unwanted operation errors occur.

- ✓ Ergonomic design
- ✓ Robust housing in IP67
- ✓ Modular design
- ✓ Combination of enabling switch and operational unit
- ✓ Operation of up to 61 axes/functions
- ✓ Increased protection against manipulation thanks to SSP hand detection
- ✓ Universal connection via plug, cable or terminal

Product configurator

EDI

Emergency stop button

Self-monitoring contact blocks

In order to maintain safety, the switch elements of the emergency stop/emergency off buttons are equipped with a safety contact. The contact supervises continuously the correct connection between the emergency stop/emergency off button and the contact element. Even redundant, safe emergency-off chains are ineffective unless the contact block is accurately connected with the emergency off button.

If the emergency stop/emergency off button is disconnected from the contact element as a result of an imperfect assembly or mechanical damage, the safety contact disconnects immediately and the machine shuts down. The machine can be restarted only after successful trouble shooting.

EDI A3B illuminated emergency stop button

IP69K for extreme operating conditions

Operating elements

Operating elements for all applications

The SSP control elements can be used in a wide range of applications, from the simplest to the most demanding environments requiring ECOLAB and IP69K certifications. With compact housing dimensions of less than 40 mm, the operating elements of the EDI series, such as the tGard series, can be easily mounted on standard aluminum profile systems. Numerous individual designs and button configurations can be realized with Fortress switches and thus adapt to different application conditions.

EDI

EDI emergency stop button and operational units

Narrow housing shapes with holding brackets for quick assembly.

Safety System Products

SSPN Safety System Products North AB
Tullkammarvägen 14
439 31 Onsala
Sweden

Tel: +46 10 212 31 50
www.sspn.se, info@sspnorth.se

INTERNATIONAL PARTNERS

Find them on our website

www.safety-products.de

Our contribution

Environmentally friendly paper
FSC®, EU Ecolabel

Modifications and errors excepted

April 2022 | 4.0

1000312

we simplify safety